DocuSign Envelope ID: F86F32E6-FD59-4A22-9135-A4BB64AF0D2C

8/17/99

REVISIONS

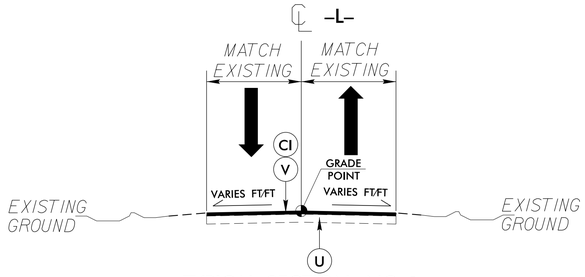

TYPICAL SECTION NO. 1

MILL –L– STA. 10+70.00 TO STA. 10+95.00
–L– STA. 19+26.00 TO STA. 19+51.00

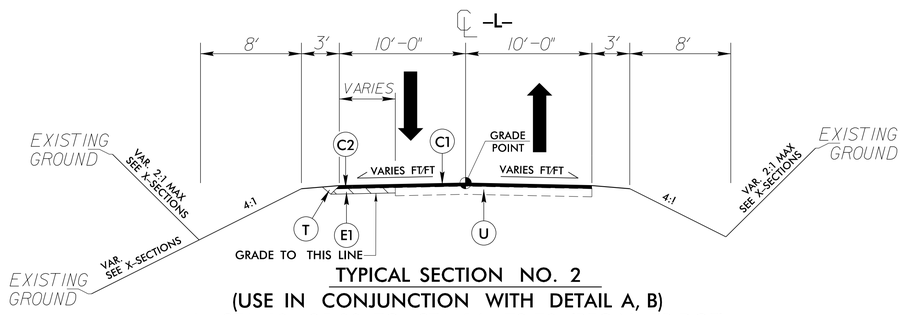

TYPICAL SECTION NO. 2

(USE IN CONJUNCTION WITH DETAIL A, B)
–L– STA. 10+95.00 TO STA. 14+73.70 (BEGIN BRIDGE)
–L– STA. 15+26.30 (END BRIDGE) TO STA. 16+91.41
–L– STA. 18+18.12 TO STA. 19+26.00

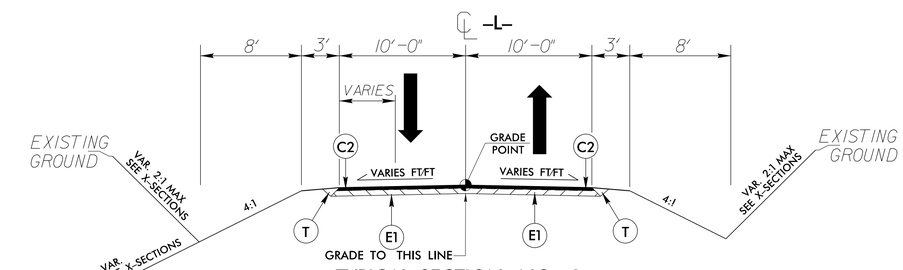

TYPICAL SECTION NO. 3

–L– STA. 16+91.41 TO STA. 18+18.12

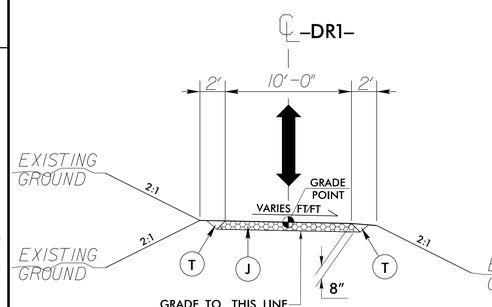

TYPICAL SECTION NO. 4

–DR1– STA. 10+10.00 TO STA. 11+70.00

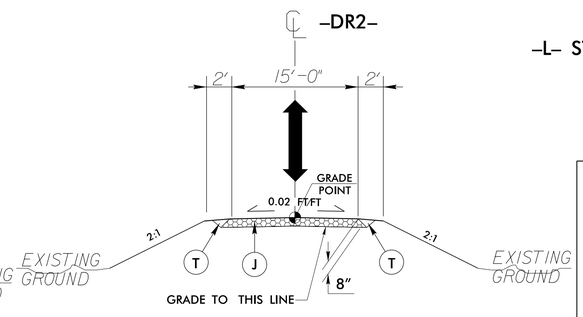

TYPICAL SECTION NO. 5

–DR2– STA. 10+10.00 TO STA. 11+72.00

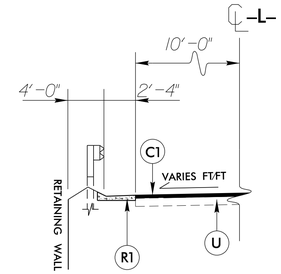

DETAIL A

SHOULDER BERM GUTTER
–L– STA. 15+35.26 TO 16+00.00 (LT)

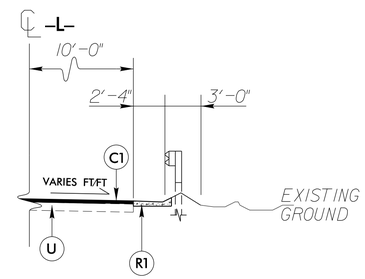

DETAIL B

SHOULDER BERM GUTTER
–L– STA. 15+97.00 TO 16+05.00 (LT)
–L– STA. 15+31.23 TO 15+48.08 (RT)

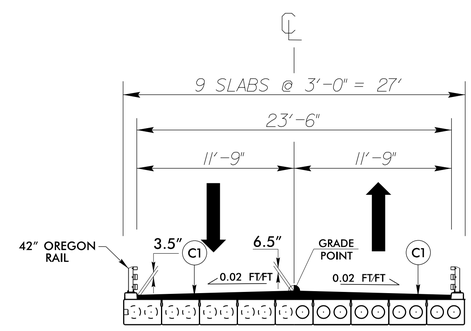

BRIDGE TYPICAL SECTION

–L– STA. 14+73.70 TO STA. 15+26.30

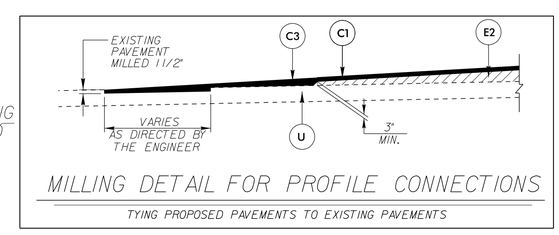

MILLING DETAIL FOR PROFILE CONNECTIONS

TYING PROPOSED PAVEMENTS TO EXISTING PAVEMENTS

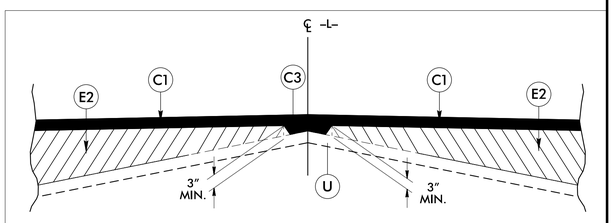

WEDGING DETAIL

wsp
434 Fayetteville Street Suite 1500
Raleigh, NC 27601 - 919.836.4040
LICENSE NO. F-0165

PROJECT REFERENCE NO.	SHEET NO.
17BPJ4.R.I77	2A-1
R/W SHEET NO.	

ROADWAY DESIGN ENGINEER
12/10/2021
NORTH CAROLINA PROFESSIONAL SEAL 043139 ENGINEER HOLLY CHRISTENBURY
DocuSigned by: Holly Christenbury

DOCUMENT NOT CONSIDERED FINAL UNLESS ALL SIGNATURES COMPLETED

PAVEMENT SCHEDULE

C1	PROP. APPROX. 1.5″ ASPHALT CONCRETE SURFACE COURSE, TYPE S9.5B, AT AN AVERAGE RATE OF 165 LBS. PER SQ. YD.
C2	PROP. APPROX. 3″ ASPHALT CONCRETE SURFACE COURSE, TYPE S9.5B, AT AN AVERAGE RATE OF 165 LBS. PER SQ. YD. IN EACH OF TWO LAYERS.
C3	PROP. VAR. DEPTH ASPHALT CONCRETE SURFACE COURSE, TYPE S9.5B, AT AN AVERAGE RATE OF 110 LBS. PER SQ. YD. PER 1″ DEPTH TO BE PLACED IN LAYERS NOT LESS THAN 1″ IN DEPTH OR GREATER THAN 1½″ IN DEPTH.
E1	PROP. APPROX. 5″ ASPHALT CONCRETE BASE COURSE, TYPE B25.0C, AT AN AVERAGE RATE OF 570 LBS. PER SQ. YD.
E2	PROP. VAR. DEPTH ASPHALT CONCRETE BASE COURSE, TYPE B25.0C, AT AN AVERAGE RATE OF 114 LBS. PER SQ. YD. PER 1″ DEPTH TO BE PLACED IN LAYERS NOT LESS THAN 3″ IN DEPTH OR GREATER THAN 5½″ IN DEPTH.
J	PROP. 8″ AGGREGATE BASE COURSE.
R1	SHOULDER BERM GUTTER
T	EARTH MATERIAL.
U	EXISTING PAVEMENT.
W	WEDGING (SEE DETAIL THIS SHEET).

NOTES:
1. ALL SLOPES ARE 1:1 UNLESS OTHERWISE NOTED.

TEMPORARY PAVEMENT SCHEDULE

C2	PROP. APPROX. 3″ ASPHALT CONCRETE SURFACE COURSE, TYPE SF9.5B, AT AN AVERAGE RATE OF 165 LBS. PER SQ. YD. IN EACH OF TWO LAYERS.
E1	PROP. APPROX. 5″ ASPHALT CONCRETE BASE COURSE, TYPE B25.0C, AT AN AVERAGE RATE OF 570 LBS. PER SQ. YD.

11:21:17 AM
17BPJ4.R.I77_Rdy_typ.dgn
12/9/2021