DocuSign Envelope ID: 505BF3C1-B833-40FB-B1B3-299415896782

PROJECT REFERENCE NO.	SHEET NO.
I7BPJ4.RJ77	EC-2
R/W SHEET NO.	
ROADWAY DESIGN ENGINEER	HYDRAULICS ENGINEER

TEMPORARY ROCK SILT CHECK TYPE 'A' WITH EXCELSIOR MATTING AND POLYACRYLAMIDE (PAM)

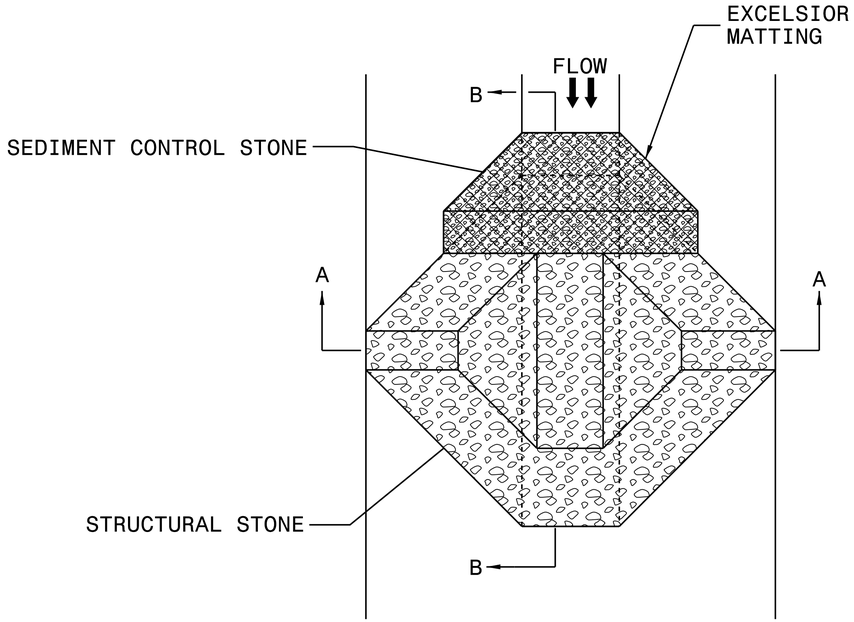

PLAN

NOTES:

INSTALL TEMPORARY ROCK SILT CHECK TYPE A IN ACCORDANCE WITH ROADWAY STANDARD DRAWING NO. 1633.01.

USE EXCELSIOR FOR MATTING MATERIAL AND ANCHOR MATTING SECTION AT TOP AND BOTTOM WITH CLASS B STONE.

PRIOR TO POLYACRYLAMIDE (PAM) APPLICATION, OBTAIN A SOIL SAMPLE FROM PROJECT LOCATION, AND FROM OFFSITE MATERIAL, AND ANALYZE FOR APPROPRIATE PAM FLOCCULANT TO BE APPLIED TO EACH ROCK SILT CHECK.

INITIALLY APPLY 4 OUNCES OF POLYACRYLAMIDE (PAM) TO TOP OF MATTING SECTION AND AFTER EVERY RAINFALL EVENT THAT EQUALS OR EXCEEDS 0.50 INCHES.

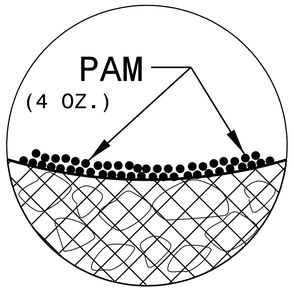

INSET A

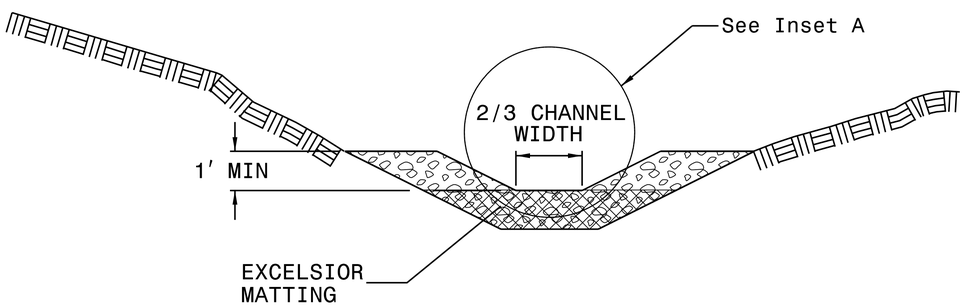

SECTION A-A

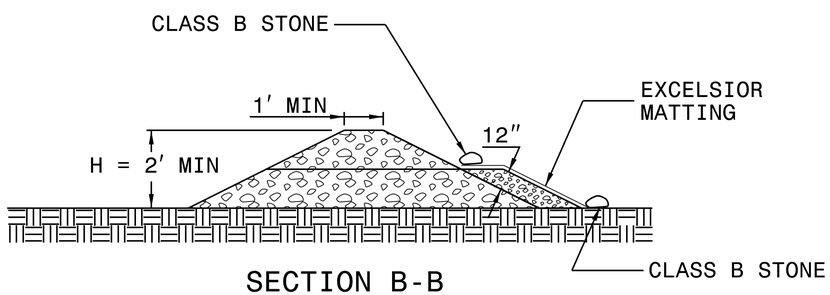

SECTION B-B

NOT TO SCALE